A Mini Project Report on

AUTOMATIC STREET LIGHT CONTROL USING EMBEDDED SYSTEM

Submitted to

University of Visvesvaraya College of Engineering

in partial fulfilment of the requirements for the award of 6th Sem. **B.Tech.** Degree in

Electrical and Electronics Engineering

Submitted By:

K B Sreekanth(U25UV23T040040)

K H Manoj(U25UV23T040041)

K Vikas (U25UV23T040042)

Kalpesh Patel R (U25UV23T040043)

Khadijatul Kubra parveez(U25UV23T040044)

Under the guidance of

Dr. Madhusudhana J

Associate Professor

DEPARTMENT OF ELECTRICAL ENGINEERING

University of Visvesvaraya College of Engineering

K R Circle Bengaluru – 560 001.

2025-26

DEPARTMENT OF ELECTRICAL ENGINEERING

University of Visvesvaraya College of Engineering

K.R. Circle Bengaluru – 560 001.

CERTIFICATE

This is to certify that **K B Sreekanth, K H Manoj, K Vikas, Kalpesh Patel R and Khadijatul Kubra Parveez** Bearing UUCMS No. **U25UV23T040040, U25UV23T040041, U25UV23T040042, U25UV23T040043, U25UV23T040044** in partial fulfilment of the requirements of **VI** Semester guidelines of B.Tech. in **Electrical and Electronics Engineering** prescribed by University of Visvesvaraya College of Engineering during the academic year 2026.

Signature of the Guide 17-4/26

Dr. Madhusudhana J

Associate Professor

Department of electrical engineering

Signature of the chairperson

H. Prasanna Kumar

Professor and chairperson

Department of electrical engineering

DECLARATION

This is to declare that this report has been written by us. No part of this report is plagiarized from other sources. All the information included from other sources has been duly acknowledged. We are aware that if any part of the report is found to be plagiarized, We shall take full responsibility for it.

K B Sreekanth
K H Manoj
K Vikas
Kalpesh Patel R
Khadijatul Kubra Parveez

Place: Bengaluru

Date:

ACKNOWLEDGEMENT

We would like to express our sincere gratitude to all those who supported and guided us throughout the completion of this project. Their encouragement, expertise, and thoughtful insights have been invaluable.

First and foremost, We extend our heartfelt to our proctor, **Dr. Madhusudhana J**, Associate Professor, UVCE whose mentorship and constructive feedback played a crucial role in shaping the direction and quality of this work. Their deep knowledge and patient guidance helped us navigate complex challenges and refine our understanding of the subject matter.

Special thanks go to our colleagues, whose discussions and collaborative spirit enriched our perspective and helped us critically evaluate various aspects of the project. Their support during brainstorming sessions and technical reviews was both motivating and enlightening. This project has been a rewarding learning experience, and we are truly grateful to everyone who played a part in its realization.

K B Sreekanth
K H Manoj
K Vikas
Kalpesh Patel R
Khadijatul Kubra Parveez

ABSTRACT

Traditional street lighting systems operate either manually or remain switched ON at full brightness throughout the night, regardless of surrounding conditions, resulting in significant energy wastage and reduced lamp lifespan. To address these limitations, we are currently developing an Automatic Street Light Control System using an ESP32 microcontroller integrated with an LDR (Light Dependent Resistor) and PIR (Passive Infrared) motion sensor.

The proposed system aims to achieve intelligent brightness control of an LED based on ambient light conditions and human/motion detection. During daytime, when the LDR detects sufficient natural light, the LED will remain OFF to conserve energy. At night, the system will operate at dim brightness (approximately 1.5V) when no motion is detected, and switch to full brightness (2.15V equivalent) when the PIR sensor detects motion. We are implementing analog current regulation using a BC547 NPN transistor in emitter-follower configuration to ensure smooth, flicker free illumination without PWM.

The use of ESP32 (featuring dual-core processor, Wi-Fi and Bluetooth connectivity) provides enhanced processing capability and future scalability for IoT integration, allowing remote monitoring and control capabilities that we plan to explore in subsequent phases. The system is being designed and simulated in Wokwi, with hardware prototyping currently underway. Upon completion, the system is expected to demonstrate significant energy savings, extended LED lifespan, and enhanced safety for smart city applications. We are currently in the simulation verification phase, with hardware assembly pending final component testing.

CONTENTS

Chapter 1: Introduction and Literature Review.....01

1.1 Background

1.2 Existing Methods with Literature Review

1.3 Problem Statement

1.4 Proposed Method

1.5 Objectives

1.6 Organization of the Report

Chapter 2: Methodology 15

2.1 Proposed Block Diagram

2.2 Explanation of Each Block

2.3 System Modelling and Simulation

Chapter 3: Software and Hardware 20

3.1 Software Implementation

3.2 Required Hardware for Proposed Block Diagram

3.3 Detailed Specification of Component

Chapter 4: Results and Discussions.....31

4.2 Simulation Results

4.2 Experimental Data and Observations

4.3 Detailed Explanation of Results

Chapter 5: Conclusion and Future Work.....35

5.1 Conclusion of Work

5.2 Scope for Future work

References..... 39

LIST OF TABLES

Table 3.3: Program variables and definitions

Table 3.6: Bill of Materials

Table 3.9: ESP32 pin specifications

Table 4.1: Experimental data for day time condition

Table 4.2: Experimental data for night time without vehicle motion condition

Table 4.3: Experimental data for night time with vehicle motion condition

LIST OF FIGURES

Figure 2.1: Block diagram of proposed system

Figure 3.2: Simulation model of automatic street light controller

Figure 3.7:Schematic diagram of hardware components

Figure 4.1: Simulation output for Daytime Condition

Figure 4.2: Simulation output for Night time without vehicle motion Condition

Figure 4.3: Simulation output for Night time with vehicle motion Condition

ABBREVATIONS

- **LED** – Light Emitting Diode
- **LDR** – Light Dependent Resistor
- **PIR** – Passive Infrared Sensor
- **DC** – Direct Current
- **V** – Voltage in volts
- **mA** – Milliampere
- **BC547** – General Purpose NPN Transistor
- **Ω (Ohm)** – SI Unit of Electrical Resistance
- **A0 –** Analog I/O pin
- **GPIO-** General pin input output

CHAPTER 1

INTRODUCTION AND LITERATURE REVIEW

1.1 Background

Street lighting plays a vital role in ensuring safety, security, and visibility in urban and rural areas during nighttime. Traditionally, street lights are either switched ON manually or remain ON throughout the night at full brightness. This approach leads to significant energy wastage, especially in areas with low traffic during late hours. With the increasing demand for sustainable solutions, there is a growing need for intelligent systems that can optimize energy usage without compromising public safety.

The concept of automatic street lighting systems emerged to address this challenge. By using sensors such as **Light Dependent Resistors (LDRs)** and **Passive Infrared (PIR) motion sensors,** the system can dynamically adjust the brightness of street lights.

During the day, lights remain OFF, thereby saving energy. At night, the lights operate at a dim level to conserve power but automatically switch to full brightness when motion is detected, ensuring safety for pedestrians and vehicles. Such systems not only reduce power consumption but also extend the lifespan of lighting equipment. With the integration of microcontrollers like the **ESP 32,** these systems become cost-effective, reliable, and suitable for smart city infrastructure.

1.2 Existing Methods with Literature Review

Early street lighting systems were either manually controlled or used fixed-time schedulers. While simple, these approaches keep lights ON at full brightness regardless of ambient conditions or pedestrian/vehicular activity. Studies consistently note high energy wastage, reduced lamp life due to continuous full-load operation, and limited adaptability to seasonal or weather-related changes. This gap motivated the shift toward sensor-driven, demand- responsive lighting.

Photo-Sensor (LDR) Based Control: Photo-sensor control using Light Dependent Resistor (LDRs) is one of the earliest automation techniques. LDRs translate ambient illuminance into a voltage level so lights can switch ON at dusk and OFF at dawn. Literature highlights LDR control as low-cost, robust, and easy to calibrate (via hysteresis thresholds to avoid rapid toggling around twilight). However, LDR-only systems provide binary control (ON/OFF) and do not address dynamic needs (e.g., quiet vs. busy streets at night), leaving efficiency gains on the table.

Motion-Aware Lighting with PIR Sensors: Passive Infrared (PIR) sensors detect human/vehicle presence by sensing changes in infrared radiation. Research shows that occupancy-triggered brightening can significantly reduce nightly energy consumption while maintaining safety. PIR sensors are inexpensive, low-power, and reliable for human-scale motion, but they can miss very slow movement or be affected by environmental factors (temperature differentials, sensor placement). Hence, PIR is typically combined with a baseline illumination strategy to avoid complete darkness.

Hybrid LDR with PIR Strategies: Combining LDR (to determine day/evening/night) with PIR (to detect activity) is widely reported as a best-practice hybrid. The dominant pattern lights OFF in daylight, dim at night for wayfinding, and bright upon motion. This approach balances energy savings with perceived safety and user comfort. Comparative studies in campuses, pathways, and parking areas report notable energy reductions versus always-on lighting, along with high user acceptance due to immediate brightening during occupancy.

Brightness Control Techniques: PWM vs. Analog Current: Most modern work uses PWM dimming for LEDs due to its efficiency and digital simplicity. However, PWM can introduce visible flicker at low frequencies and EMI concerns if not filtered. In contrast, analog current control (e.g., via a transistor stage) offers flicker-free, continuous illumination transitions prized for visual comfort and video surveillance contexts.

Literature cautions that analog dimming requires careful thermal and current management to maintain LED lifetime and color stability; nevertheless, for low-power, single-lamp prototypes, analog control is simple and effective.

Microcontroller-Centric Implementations: Academic and hobbyist implementations commonly use Arduino IDE (ESP32) for rapid prototyping due to its accessible analog inputs (for LDR), digital inputs (for PIR), and straightforward I/O for driving a transistor (e.g., BC547) in emitter-follower or constant-current driver topologies. Typical designs include threshold logic (e.g., LDR voltage bands for day/evening/night) and state-based control (idle- dim vs. motion-bright). The literature emphasizes:

- Proper sensor calibration (LDR voltage thresholds tuned to local lux levels).
- Debouncing/timeout windows for PIR to prevent rapid toggling.
- Fail-safe defaults (e.g., dim at night if a sensor fails).

1.3 Problem Statement

Traditional street lighting systems operate either manually or remain switched ON at full brightness throughout the night, regardless of the surrounding conditions. This results in unnecessary power consumption, reduced efficiency, and shorter lamp lifespan. In many areas, lights remain ON even during periods of low or no activity, leading to energy wastage. At the same time, completely switching OFF the lights at night can compromise safety and security for pedestrians and vehicles.

There is a clear need for an intelligent street lighting system that can automatically respond to changes in the environment. Such a system should keep the lights OFF during the day, operate them at dim brightness during the night for energy conservation, and increase them to full brightness only when motion is detected to ensure safety. Addressing this problem will contribute to energy savings, cost reduction, and improved reliability of public lighting infrastructure, making it suitable for sustainable and smart city applications.

1.4 Proposed Method

The proposed system uses an Arduino ESP32 microcontroller integrated with two sensors a Light Dependent Resistor (LDR) and a Passive Infrared (PIR) sensor to automatically control a street light (represented by an LED). The method focuses on reducing energy wastage while ensuring adequate illumination and safety.

The working principle is as follows:

- Daytime: When the LDR detects ambient light voltage below 2.5 V usually 0 to 1V at Va0 of Arduino pin, the LED remains OFF as natural light is sufficient.
- Evening/Cloudy Conditions: If the LDR voltage lies between 1.0 V and 2.5 V, the LED operates at dim brightness approximately 1.5V to provide minimal illumination.
- Night (No Motion): When the LDR voltage falls above 2.5V and the PIR sensor detects no movement, the LED glows dimly at ~1.5 V to conserve energy.
- Night (Motion Detected): If motion is detected by the PIR sensor, the LED automatically switches to full brightness (~3.0 V), ensuring safety and visibility.

For brightness control, an NPN transistor (BC547) is used in an emitter follower configuration, allowing analog current control instead of PWM. This provides smooth brightness transitions without flickering. A 1 kΩ resistor limits the base current to the transistor, while a 220 Ω resistor protects the LED. The system runs on a 5 V DC supply. This method ensures the lights respond intelligently to environmental conditions and human presence, thereby conserving energy, improving reliability, and contributing to smart city infrastructure.

1.5 Objectives

The main objectives of the proposed automatic street lighting system are:

- To design and implement an energy-efficient street lighting system that automatically responds to surrounding light conditions and human activity.
- To ensure lights remain OFF during daytime when natural light is sufficient, thereby reducing unnecessary power consumption.
- To provide dim illumination during nighttime in the absence of movement for energy conservation and basic visibility.
- To switch lights to full brightness when motion is detected to ensure safety and security for pedestrians and vehicles.
- To achieve smooth and flicker-free brightness control by using analog current control through a transistor instead of PWM.
- To develop a cost-effective and reliable system using easily available components such as Arduino Uno, LDR, PIR sensor, and LED.
- To contribute toward smart city infrastructure by creating a scalable and sustainable street lighting solution.

1.6 Organization of Report

This report is structured into five chapters.

Chapter 1 provides an introduction, literature review, problem statement, and project objectives.

Chapter 2 details the system methodology, including the block diagram and mathematical principles.

Chapter 3 describes the hardware and software components and their implementation.

Chapter 4 presents the experimental results and a detailed discussion of the system's performance.

Chapter 5 concludes the report and suggests potential avenues for future work.

CHAPTER 2: METHODOLOGY

2.1 Proposed Block Diagram

The proposed Automatic Street Light Control System is designed using an Arduino UNO microcontroller, sensors, driver circuit, and LED lights. The block diagram represents the overall functional architecture of the system.

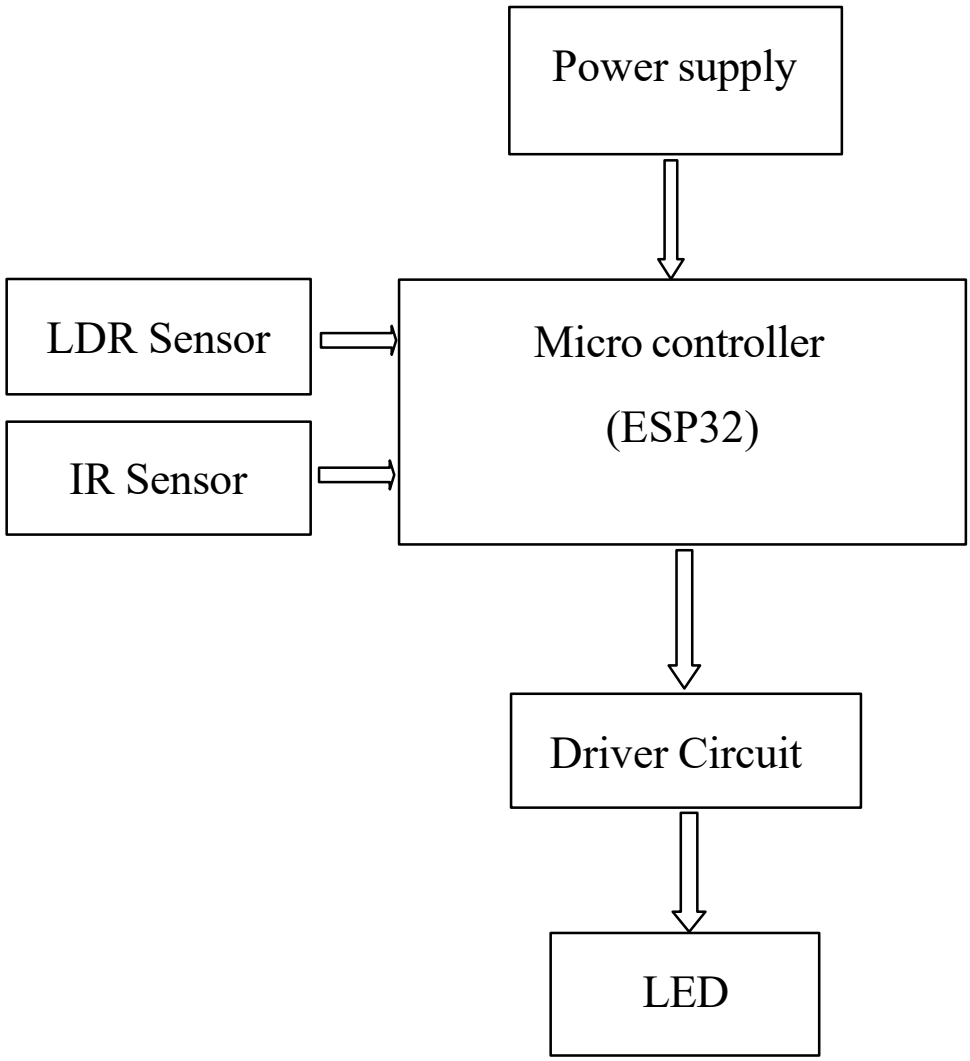

Figure 2.1 Block diagram of proposed system

2.2 Explanation of Each Block

2.2.1 Power Supply Unit

The power for this project is taken directly from the computer through a USB connection. The Arduino ESP32, when connected to the computer, receives a regulated 5V DC supply. This same supply is used to power the connected sensors (LDR and PIR) and the driver circuit.

By using the computer as the power source, the system avoids the need for an external adapter or battery. This makes the setup compact, cost-effective, and convenient for testing and demonstration purposes.

2.2.2 LDR Sensor (Light Dependent Resistor)

The LDR sensor is used to detect ambient light conditions and is crucial for differentiating between day and night. It works on the principle that its resistance decreases with increasing light intensity and increases with decreasing light intensity. During daytime, the resistance of the LDR is very low (a few hundred ohms), producing an analog voltage of about 0–1 V when connected in a voltage divider circuit. At night, the resistance becomes very high (several kilo- ohms), causing the voltage at the Arduino input to rise to about 4–5 V.

This voltage change is sensed by the Arduino through its analog pin (GPIO34). Using this information, the system ensures that the streetlight remains OFF during daytime, preventing unnecessary energy consumption. The LDR provides a simple yet effective way to implement light-based automation.

2.2.3 **PIR Sensor** (Infrared Motion Detector)

The PIR sensor is used to detect the motion of humans or vehicles during the night. It operates by sensing changes in infrared radiation emitted by warm objects such as people or cars. When no motion is present, the sensor output remains LOW (close to 0 V).
When motion is detected, the sensor gives a HIGH signal (3.3–5 V), which is fed into the Arduino at a digital input pin (D2). This signal allows the Arduino to differentiate between idle conditions and active motion. If motion is detected, the Arduino increases the brightness.

In the absence of motion, the LED glows dim, which conserves power. The PIR sensor is a low-cost, highly reliable, and widely used motion detection device, making it an ideal choice for this project.

2.2.4 **Microcontroller (Arduino ESP32)**

The Arduino ESP32 is the heart of the system and acts as the decision-making unit. It continuously monitors the input signals coming from the LDR sensor and PIR sensor. The LDR provides an analog voltage depending on the intensity of surrounding light, while the PIR provides a digital signal whenever motion is detected. Based on these two inputs, the Arduino executes a programmed control logic.

During daytime, when the LDR voltage is low, the microcontroller keeps the streetlight OFF to save power. At night, when the LDR detects darkness, the microcontroller switches the light ON. If no motion is detected, the LED glows dim to save energy, but when the PIR detects motion, the Arduino immediately increases the brightness to full.

Thus, the microcontroller ensures automatic operation without the need for manual switching. It is programmed using embedded C through the ESP32, and its versatility makes the system flexible, reliable, and low-cost.

2.2.4 Driver Circuit

The driver circuit is responsible for controlling the power delivered to the LED streetlight. Since the microcontroller pins cannot directly supply the required current to drive LEDs at different brightness levels, a transistor-based driver circuit is used. An NPN transistor acts as a switch and current amplifier. When the Arduino provides a control signal at the base of the transistor, it allows current to flow from the collector to the emitter, thereby powering the LED.

2.2.5 Resistors

- Resistor Block Used in the Experiment
- - Resistors are used in the circuit to ensure proper current control and signal conditioning. A 220 Ω resistor is connected in series with the LED to limit the current and protect the LED from damage.In the case of a raw LDR, a 10 kΩ resistor is used to form a voltage divider, which converts the variable resistance of the LDR into a measurable voltage.
- - In this experiment, since an LDR module is used, the voltage divider is already built into the module, eliminating the need for an external 10 kΩ resistor. A 1 kΩ resistor is used in hardware implementation with a transistor to limit the base current and protect the ESP32, although it is not required in the simulation. Thus, resistors play a vital role in ensuring safe operation, accurate sensing, and proper functioning of the overall system.

2.2.6 LED (Street Light)

The LED light serves as the output block and simulates the streetlight in this project. The LED operates in three distinct modes, depending on the signals received from the driver circuit and Arduino. In the daytime, when the LDR detects sufficient light, the LED

remains completely OFF, preventing unnecessary power usage.

At night, when there is no motion detected, the LED glows dimly, ensuring that the street remains partially illuminated while saving energy. When motion is detected by the PIR sensor, the Arduino switches the LED to full brightness, providing maximum visibility and safety.

The LED used in the project has a forward voltage drop of around 2 V and operates efficiently at low power levels. In real-world applications, this LED can be replaced with high-power street lamps to implement the system on a larger scale

CHAPTER 3: SOFTWARE AND HARDWARE

3.1 Software Implementation

- Software implementation of the smart street lighting system is carried out using the ESP32 microcontroller programmed in the Arduino IDE. The system continuously monitors environmental conditions using sensors and controls the LED accordingly.

- Initialization:
- The LDR pin (GPIO34) is configured as an analog input to measure light intensity, and the PIR sensor pin (GPIO27) is set as a digital input to detect motion. The LED pin (GPIO25) is configured as a digital output.

- Sensor Data Acquisition:
- The ESP32 reads the analog value from the LDR using the analogRead() function. This value indicates the surrounding light intensity. The PIR sensor output is read using digitalRead() to detect motion.

- Decision-Making Logic:
- A threshold value is defined to differentiate between day and night conditions.
- If the LDR value is below the threshold, it indicates daytime, and the LED is turned OFF.
- If the LDR value is above the threshold, it indicates nighttime.

- **During night time**:

- If motion is detected (PIR = HIGH), the LED is turned ON.
- If no motion is detected (PIR = LOW), the LED remains ON or operates at a reduced level (depending on implementation).

4. IoT Integration:

- The system is integrated with the Blynk IoT platform for monitoring sensor values and controlling the LED remotely. Users can switch between automatic and manual modes and adjust brightness using a mobile application.

5. Continuous Operation:

- The system operates continuously by executing the loop function, ensuring real-time response to environmental changes.

6. Conclusion:

- The software enables automatic control of street lighting based on light intensity and motion detection, improving energy efficiency and automation.

3.2 System Modelling and Simulation

- **Objective:** To verify the functionality of the Street Light Intensity Controller before hardware testing.

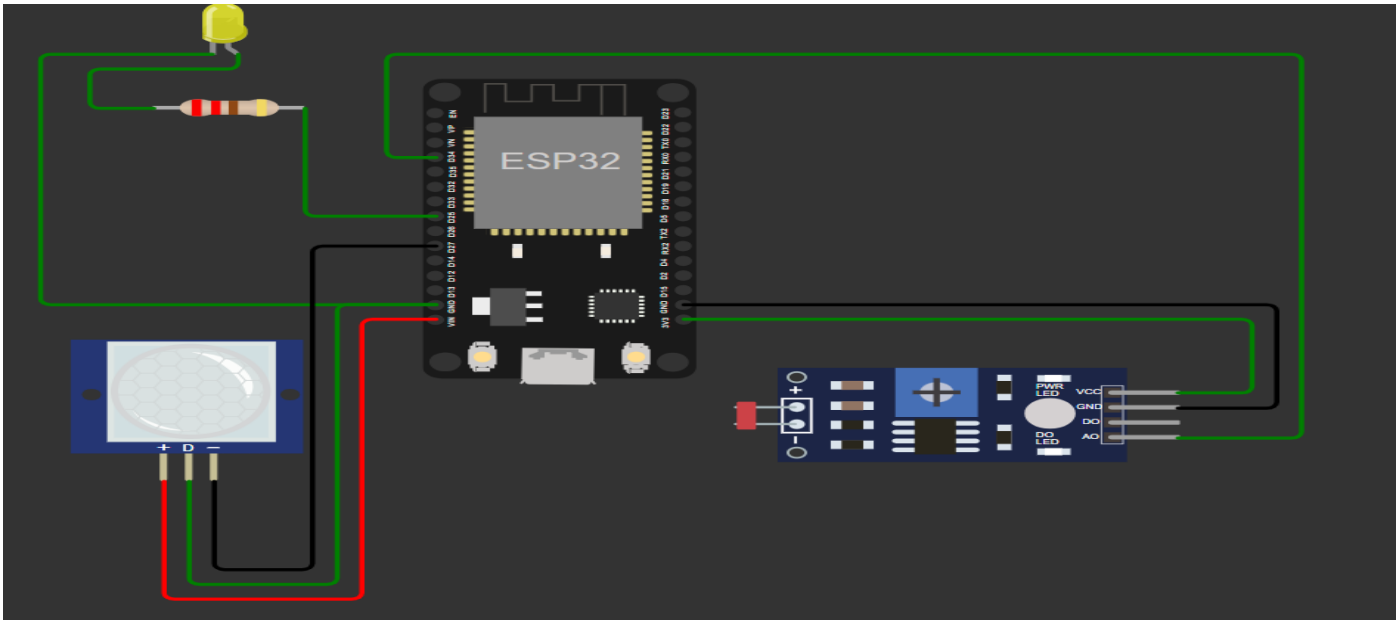

Simulink Model of Automatic Street light Control

- **Simulation Setup (wokwi):**
- The **LDR** was simulated as a variable resistor to mimic daytime and night time illumination.
- The **IR sensor** was represented by a digital input pulse to simulate vehicle detection.
- The **Arduino ESP32** was programmed with the control logic:
- Lights OFF in daytime.
- Lights ON at **dim intensity** in night time without motion.
- Lights at **full intensity** in night time with motion detected.
- The **LED** was connected via a transistor driver to show brightness variations in simulation.

1. Data Processing Stage (ESP32)

- The Arduino continuously reads the LDR voltage at analog input A0 and compares it with a threshold to determine day or night.
- Simultaneously, it monitors the PIR signal at digital pin D2 to check for motion.
- Based on these inputs, it executes the programmed control logic.

2. Control Logic Stage

- **Daytime** → LDR voltage low → Streetlight OFF.
- **Night, no motion** → LDR voltage high & PIR LOW → Streetlight DIM.
- **Night, motion detected** → LDR voltage high & PIR HIGH → Streetlight BRIGHT.
- This ensures energy is used only when required.

3. Driver Stage

- Since Arduino cannot directly drive the LED with high current, a **transistor driver circuit** is used.

- The Arduino output (D9/D10) controls the transistor base with suitable resistors, allowing controlled current to flow through the LED.
- Different resistor values regulate LED brightness levels.

4. Output Stage (LED Streetlight)

- The LED serves as the output device.
- It operates in three modes: **OFF during daytime, DIM at night without motion, and BRIGHT at night with motion**.
- This stage provides visible illumination as per the processed signals.
  -

Before hardware implantation, the entire system and control logic were modelled and simulated in wokwi. This crucial step allows the verification of the system's behavior and control logic validation in a virtual environment, mitigating risks associated with hardware testing. The detailed Simulink model is as shown in figure

Code:

```
#define BLYNK_TEMPLATE_ID "TMPL3rNerJt6C"
#define BLYNK_TEMPLATE_NAME "smart street light"
 #define BLYNK_AUTH_TOKEN "HrZo7tNwjCfnkNFXkJl1Guog4v_U_-lj"
#define BLYNK_PRINT Serial

#include <WiFi.h>
#include <BlynkSimpleEsp32.h>

char ssid[] = "OPPO A3x 5G";
char pass[] = "kalpi124";

#define LDR_PIN 34
#define PIR_PIN 27
#define LED_PIN 25

int ldrValue;

int pirState;
```

```
bool manualMode = false;
int manualBrightness = 0;

int ldrThreshold = 1200;   // tuned value

BlynkTimer timer;

// PWM setup
#define PWM_CHANNEL 0
#define PWM_FREQ 5000
#define PWM_RESOLUTION 8

void checkSensors()
{
  ldrValue = analogRead(LDR_PIN);
  pirState = digitalRead(PIR_PIN);

  Serial.print("LDR: ");
  Serial.print(ldrValue);
  Serial.print("  PIR: ");
  Serial.println(pirState);

  if (!manualMode)
  {
    // DAY → OFF
    if (ldrValue > ldrThreshold)
    {
      ledcWrite(PWM_CHANNEL, 0);
    }
    else
    {
      // NIGHT
      if (pirState == HIGH)
      {
        ledcWrite(PWM_CHANNEL, 255); // FULL
      }
      else
      {
        ledcWrite(PWM_CHANNEL, 120);  // DIM (~30%)
      }
    }
  }
```

```
  // Send data to Blynk
  Blynk.virtualWrite(V1, ldrValue);
  Blynk.virtualWrite(V2, pirState);
}

// Manual mode switch
BLYNK_WRITE(V0)
{
  manualMode = param.asInt();
}

// Brightness slider
BLYNK_WRITE(V3)
{
  manualBrightness = param.asInt();

  if (manualMode)
  {
    int pwmValue = map(manualBrightness, 0, 100, 0, 255);
    ledcWrite(PWM_CHANNEL, pwmValue);
  }
}

void setup()
{
  Serial.begin(115200);

  pinMode(PIR_PIN, INPUT_PULLDOWN);

  ledcSetup(PWM_CHANNEL, PWM_FREQ, PWM_RESOLUTION);
  ledcAttachPin(LED_PIN, PWM_CHANNEL);

  Serial.println("Connecting to WiFi...");
  Blynk.begin(BLYNK_AUTH_TOKEN, ssid, pass);

  timer.setInterval(1000L, checkSensors);
}

void loop()
{
  Blynk.run();
  timer.run();
}
```

Table 3.3 Program Variables and Definitions

Variable Name	Data Type	Function in Program
lightSensor	int	Stores the analog pin number (A0) to which the **LDR (Light Dependent Resistor)** is connected. Reads ambient light level (0–1023).
pirSensor	int	Stores the digital pin number (2) connected to the **PIR sensor**. Used to detect motion (HIGH = no motion, LOW = motion detected).
dimPin	int	Stores the digital pin number (9). Controls the **LED in dim mode** by setting the output HIGH/LOW.
brightPin	int	Stores the digital pin number (10). Controls the **LED in bright mode** by setting the output HIGH/LOW.
lightValue	int	Stores the **analog input reading** from the LDR (range: 0–1023). Higher values indicate lighter (daytime).
motion	int	Stores the digital reading from the PIR sensor (LOW = motion detected, HIGH = no motion).
isDay	bool	Boolean variable used to decide day/night condition based on lightValue threshold (e.g., >300 = Day).

3.4 Functions in the Code

- Program Variables and Definitions Used in the Code

- The program begins with defining the pin connections of the ESP32. The LDR sensor is connected to GPIO34 and is defined as LDR_PIN, which is used as an analog input pin to measure light intensity.

- The PIR sensor is connected to GPIO27 & is defined as PIR_PIN. It is configured as a digital input pin to detect motion, where HIGH indicates motion and LOW indicates no motion.

- The LED is connected to GPIO25 and is defined as LED_PIN. This pin is configured as a digital output pin to control the lighting system.

- The variable ldrValue is used to store the analog value read from the LDR sensor using the analogRead() function. This value represents the ambient light intensity.

- The variable pirState is used to store the digital output of the PIR sensor using the digitalRead() function. It indicates whether motion is detected or not.

- The variable ldrThreshold is used to define a reference value that differentiates between day and night conditions. This value is selected based on experimental observations.

- The function pinMode() is used to configure the pins as input or output depending on their function in the circuit.

- The function analogRead() is used to read analog values from the LDR sensor.

- The function digitalRead() is used to read digital signals from the PIR sensor.

- The function digitalWrite() is used to control the LED by turning it ON or OFF based on the conditions.

- The function Serial.begin() is used to initialize serial communication for debugging purposes.

- The function Serial.print() is used to display the sensor values on the serial monitor for analysis and calibration.

- - These variables and functions together enable the ESP32 to read sensor data, process the conditions, and control the street lighting system efficiently.

3.5 Required Hardware for the Proposed Block Diagram

The construction of Automatic Street light control using Embedded system requires a set of standards, readily available electronic components.

Table 3.6: Bill of Materials

Item No.	Component	Specification	Quantity
1	Microcontroller	ESP32	1
2	Light Sensor	LDR (Light Dependent Resistor)	1
3	Motion Sensor	PIR Sensor (HC-SR501)	1
4	Resistors	10kΩ, 220Ω	As req.
5	Transistor	NPN (BC547 / TIP122)	1
6	LED	5mm LEDs	1
7	Prototyping Board	Breadboard	1
8	Wires	Jumper wires	Set

3.7 SCHEMATIC DIAGRAM OF HARDWARE COMPONENTS

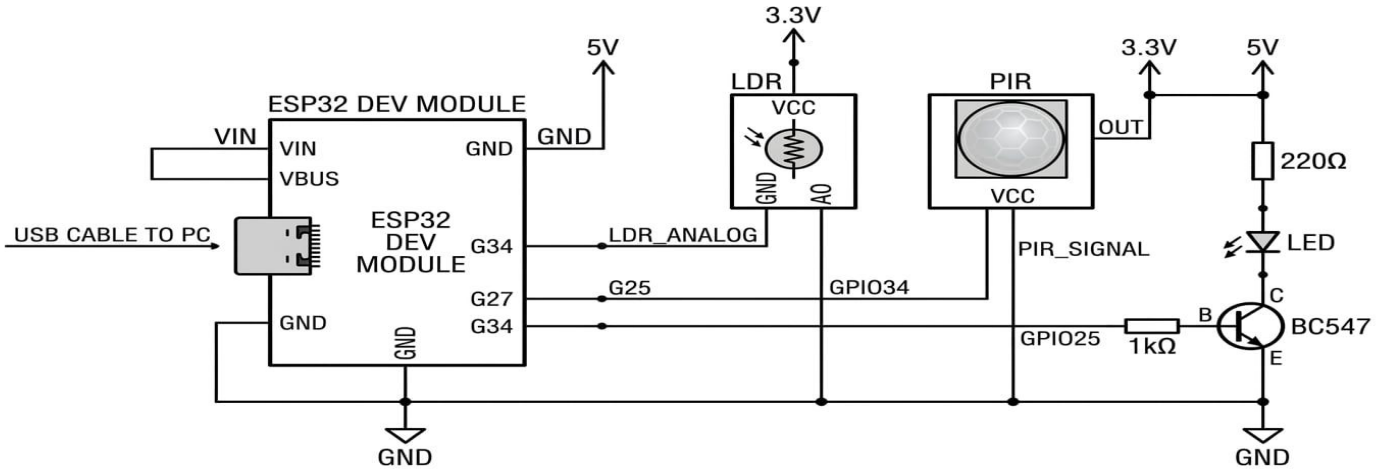

3.8 ARDUINO ESP32

The ESP32 is a high-performance System on a Chip (SoC) designed for mobile, wearable electronics, and Internet of Things (IoT) applications. Unlike the basic 8-bit Arduino boards (like the Uno), the ESP32 uses a 32-bit dual-core architecture.

Dual-Core Processing: It features the Xtensa® Dual-Core 32-bit LX6 microprocessor. This allows the chip to multitask—for example, one core can manage Wi-Fi/Bluetooth connections while the other executes your specific project logic.

Table 3.9: ESP32 Pin Specification

Pin Type	Function used	Connected component	Purpose/function
GPIO 34	Analog Input	LDR Module(A0)	Reads light intensity(ADC value)
GPIO 27	Digital input	PIR sensor output	Detects motion (high/low signal)
GPIO 25	Digital output	LED(via 220 resistor)	Controls LED brightness
3.3V	Power output	LDR Module(vcc)	Supplies power to LDR module
VIN (5V)	Power Output	PIR Sensor (vcc)	Supplies power to PIR sensor
GND	Ground	LDR, PIR, LED	Common reference for circuit

3.9.1 NPN Transistor

- The transistor used in the circuit is an NPN type (BC547) having three terminals: Base (B), Collector (C), and Emitter (E)
- The base terminal is connected to the ESP32 output pin (GPIO25) through a 1 kΩ resistor. This resistor is used to limit the base current and protect the microcontroller.
- The collector terminal is connected to the negative terminal of the LED arrangement.
- The positive terminal of the LEDs is connected to the power supply (VIN or 5V).
- The emitter terminal is connected to the ground (GND) of the circuit.

- A common ground is maintained between the ESP32 and the power supply to ensure proper operation.
- This configuration allows the ESP32 to control the LED load through the transistor.

3.9.2 Resistors

1. 10 kΩ Resistor (LDR Circuit):

A 10 kilo-ohm resistor is used in conjunction with the Light Dependent Resistor (LDR) to form a voltage divider circuit. The resistance of the LDR varies with light intensity, and this variation is converted into a corresponding voltage using the voltage divider principle. This voltage is then fed to the analog input pin of the ESP32 (GPIO34), enabling the microcontroller to detect changes in ambient light conditions. Thus, the 10 kΩ resistor is essential for converting resistance variation into a measurable voltage signal.

2. 220 Ω Resistor (LED Circuit):

A 220 ohm resistor is connected in series with the LED to limit the current flowing through it. LEDs are sensitive components and can be damaged if excessive current passes through them. The resistor ensures that the current remains within safe limits, thereby protecting the LED and ensuring reliable operation. It also helps in controlling

the brightness to a safe and stable level.

3. 1 kΩ Resistor (Transistor Base – Hardware Implementation):

In the hardware implementation, a 1k ohm resistor is used between the ESP32 output Pin and the base of the transistor(BC547) this resistor limits the base current entering the transistor, preventing damage to both the transistor and the microcontroller. It also ensures proper switching operation of the transistor , which is used to drive multiple leds

3.9.3 LDR Sensor

The LDR is connected in series with a 10 kΩ resistor to form a voltage divider circuit. The junction of the LDR and resistor is connected to ESP32 analog pin GPIO 32 to sense varying voltage. One end of the LDR is connected to the 3.3V supply (to match ESP32 logic levels), and the other end is connected to the resistor, which then goes to GND.
In daylight, LDR resistance is very low, producing a small voltage at GPIO 32 ($\approx$ 0–0.6 V).
In darkness, LDR resistance is high, producing a larger voltage at GPIO 32 ($\approx$ 2.5–3.3 V), helping the ESP32 differentiate between day and night.

3.9.4 PIR Sensor

The PIR sensor has **three pins**: VCC, GND, and Output. VCC is connected to the **ESP32 VIN pin (5V)**, GND to common ground, and the **Output pin** to **ESP32 digital pin GPIO 27**.

The output signal is **LOW (0 V)** when no motion is detected and **HIGH (3.3 V)** when motion is detected.

Note: If using a 5V PIR sensor, a voltage divider or level shifter is used to ensure the Output signal does not exceed the **3.3V limit** of the ESP32 GPIO pins.

The PIR detects changes in infrared radiation caused by human or vehicle movement. The ESP32 uses this signal to decide LED operation to glow bright or dim.

CHAPTER 4: RESULTS AND DISCUSSIONS

4.1 Simulation Results

- The system was successfully simulated using the Wokwi platform.
- The LDR sensor correctly detected changes in light intensity.
- During daytime conditions, the LED remained OFF.
- During nighttime conditions, the LED turned ON.
- The threshold value was adjusted to achieve accurate day-night detection.
- The PIR sensor correctly simulated motion detection.
- The LED responded properly based on light and motion conditions.
- The system showed stable and reliable performance during simulation Experimental Data and Observation

4.1.1 Test Case 1: Daytime Condition

This test verifies that the light remains off Observation

As shown in Table 4.1, when the LDR reading is above the threshold (~500), the system identifies it as **daytime**. Regardless of motion detection, the LED output remains OFF, ensuring no power wastage during daylight.

Table 4.1: Experimental Data for Daytime Condition

LDR Value	PIR State	LED Mode	Observation
678	Low	OFF	Correctly OFF
710	High	OFF	Motion ignored, OFF
695	Low	OFF	Power saved
702	High	OFF	Stable OFF
688	Low	OFF	No false triggering

Test Case 2: Night time Without Motion

This test validates dim operation during night time when no vehicles or pedestrians are present.

Table 4.2: Experimental Data for Night time Without Motion

LDR Value	PIR State	LED Mode	Voltage across LED
180	HIGH	DIM	1.54V
160	HIGH	DIM	1.54V
142	HIGH	DIM	1.54V
198	HIGH	DIM	1.54V
210	HIGH	DIM	1.54V

Observation:

As shown in Table 4.2, when the LDR indicates night (value <500) and PIR detects no motion (HIGH), the LED operates at **dim intensity**. This confirms the energy-saving mode, which maintains visibility without unnecessary full power consumption

4.1.2 Test Case 3: Night time With Vehicle Motion

This test verifies full brightness when movement is detected during night time.

Table 4.3: Experimental Data for Night time With Motion

LDR Value	PIR State	LED Mode	Voltage across LED

152	LOW	BRIGHT	2.15V
169	LOW	BRIGHT	2.15V
188	LOW	BRIGHT	2.15V
172	LOW	BRIGHT	2.15V
160	LOW	BRIGHT	2.15V

Observation:

As shown in Table 4.3, when the LDR reading indicates night and the PIR sensor detects motion (LOW), the LED lamp immediately switches to **full brightness**. Once motion ceases, the light returns to DIM mode after a short-programmed delay, preventing flicker.

4.2 Detailed explanation of results

The experimental results comprehensively validate the proposed methodology. Each of the three test cases demonstrates that the **control logic programmed into the Arduino is functioning correctly.**

1. **Daytime Condition:**
   - The system correctly interprets high LDR values as bright ambient light.
   - LEDs remain OFF, proving that the controller avoids unnecessary energy use.
   - Even in the presence of motion, the PIR sensor input is ignored, which prevents false triggering.
   - This behaviour confirms that the system is capable of making **context-aware decisions** by prioritizing light sensor data over motion detection during the day.
2. **Night time Without Motion**

The LDR values drop below the threshold, which correctly triggers the nighttime mode.

- In the absence of motion, the LED glows at a reduced brightness, providing **low- level illumination**.
- This demonstrates the system's **energy-efficient operation**, as power consumption is minimized while still ensuring visibility.
- The dim mode also helps in reducing **light pollution**, a growing urban concern, while ensuring that areas are not left in complete darkness.

3. **Night time With Motion:**
   - The system instantly responds to motion detection by switching the LED to full brightness.
   - This rapid response ensures **maximum safety**, making pedestrians and vehicles clearly visible.
   - The programmed delay for returning to DIM mode avoids rapid switching, thus improving system stability and enhancing the lifetime of the electronic components.
   - This case highlights the **intelligent adaptability** of the system, which adjusts its behavior in real time according to traffic flow.
4. Overall, the results confirm that the proposed system successfully integrates the inputs from both LDR and PIR sensors, processes them through Arduino-based control logic, and provides **appropriate and reliable LED output.**

5. The dual-sensor approach ensures that the system is **robust against false conditions** (e.g., motion during day, or sudden changes in ambient light at dusk/dawn). The incorporation of PWM-based dimming further ensures that energy saving is achieved without compromising visibility or safety.

6. Thus, the results prove that the Street Light Intensity Controller achieves the intended objectives of **automatic operation, energy efficiency, system reliability, and enhanced public safety.**

CHAPTER 5: CONCLUSION AND FUTURE WORK

5.1 Conclusion of Work

The project titled *"Automatic Street light control using Embedded systems"* was designed, implemented, and tested successfully using **Arduino UNO, LDR, and PIR sensor** as the core components. The main objective was to achieve **automatic operation of street lights** with dynamic brightness adjustment in order to conserve energy and improve safety.

The work carried out in this project can be summarized as follows:

1. **Literature Review and Problem Identification:**
   - A study of conventional street lighting systems revealed that most lamps remain ON throughout the night at full brightness, resulting in significant power wastage.
   - The problem of high electricity consumption and reduced lifespan of lamps motivated the need for an intelligent control mechanism.
2. **System Design:**
   - A block diagram was prepared consisting of **sensing unit (LDR + PIR)**, **processing unit (Arduino UNO)**, and **output unit (LED in dim/bright states)**.
   - The LDR was used to detect ambient light intensity, and the PIR sensor was employed to detect human or vehicle motion.
3. **Simulation (wokwi):**
   - The Arduino code was first tested in Tinker cad simulation to verify sensor responses and LED switching behavior.

- Serial Monitor outputs confirmed correct functioning of OFF, DIM, and BRIGHT modes under various scenarios.

4. **Hardware Implementation:**
   - A prototype was built on a breadboard with the Arduino UNO, LDR, PIR, and LED lamp.
   - The system was tested under real environmental conditions to validate its behavior.
5. **Testing and Results:**
   - **Daytime:** LED remained OFF, ensuring no energy wastage.
   - **Nighttime without motion:** LED glowed in DIM mode (~30–40% brightness), saving energy while maintaining minimum visibility.
   - **Nighttime with motion:** LED switched to full BRIGHTNESS (100%) instantly, ensuring safety.
   - Observations confirmed smooth and reliable operation.
6. **Report Documentation:**
   - A detailed project report was prepared covering design methodology, hardware, software, simulation results, testing, discussions, advantages, and conclusion.

In summary, the project demonstrated a **low-cost, efficient, and reliable solution** to the problem of energy wastage in street lighting systems. It shows that even with basic sensors and microcontrollers, an effective **smart lighting system** can be developed.

5.2 Scope for Future Work

Although the present prototype works effectively, there are opportunities to improve and extend the system. Future developments can include the following:

1. **Solar-Powered Operation:**
   - Integrating solar panels as the primary power source will make the system self- sustainable and suitable for rural/off-grid areas.

2. **Wireless Networking of Street Lights:**
   - Each street light can be connected in a wireless mesh network using **LoRa, ZigBee, or Wi-Fi**.
   - This allows centralized monitoring, remote control, and data logging.
3. **IoT Integration and Smart City Applications:**
   - With IoT (Internet of Things), data on traffic density, energy consumption, and maintenance status can be transmitted to cloud servers.
   - Municipal corporations can monitor and control street lights in real time.
4. **Advanced Motion Sensing:**
   - PIR sensors have a limited range and may not always detect fast-moving vehicles.
   - Replacing them with **ultrasonic sensors, microwave sensors, or AI-based camera vision** can provide better accuracy and range.
5. **Dynamic Brightness Adjustment:**
   - Instead of two-step DIM and BRIGHT levels, the system can include multiple intensity levels depending on traffic flow.
   - For example, low traffic = 30% brightness, medium traffic = 60%, heavy traffic = 100%.
6. **Weather-Adaptive Lighting:**
   - Adding fog/rain sensors can enable higher brightness levels during bad weather to ensure road safety.
7. **Maintenance and Fault Detection:**
   - A self-diagnostic feature can be added to detect lamp failures and notify the maintenance team automatically.
8. **Scalability for Real Deployment:**
   - Future work should focus on testing the system with **multiple street lights** connected together on a stretch of road.

- Synchronization of lights to turn ON in sequence as vehicles move forward can be implemented.

5.3 Conclusion

The **Street Light Intensity Controller** project has demonstrated that it is possible to significantly reduce power wastage in public lighting systems while ensuring road safety. The system intelligently combines **light sensing (LDR)** and **motion detection (PIR)** to provide automated, condition-based lighting control.

Key achievements include:

- Automatic detection of **daytime and nighttime conditions**.
- Smart decision-making to keep lamps **OFF during the day**, **DIM at night without motion**, and **BRIGHT with motion**.
- Reduction in **energy consumption** compared to conventional systems.
- Low-cost implementation using easily available sensors and Arduino.

This project serves as a **proof of concept** for developing energy-efficient smart lighting systems. While it is currently implemented at a prototype scale, the design can be extended and upgraded for real-world deployment.

In conclusion, the Street Light Intensity Controller not only addresses the problem of excessive energy consumption but also contributes towards the vision of **sustainable and smart cities**. With further enhancements such as solar integration, IoT connectivity, and advanced motion detection, this system has the potential to become a practical and large-scale solution for modern urban infrastructure.

REFERENCES

1. V. Prakash, P. D., N. R., and N. P., "*Automatic Street light intensity control*," International Journal of Advance Research, Ideas and Innovations in Technology (IJARIIT), vol. 6, no. 2,pp. 258–261, 2020.
2. M. S. Tamboli, A. Kundgulwar, and L. S. V. B., "*Automatic Street light controller by using Arduino*," International Journal of Research in Academic World (IJRAW), vol. 4, no. 4, pp. 213–218, Apr. 2025.